FITTING INSTRUCTIONS

Clamp On Pro Covers

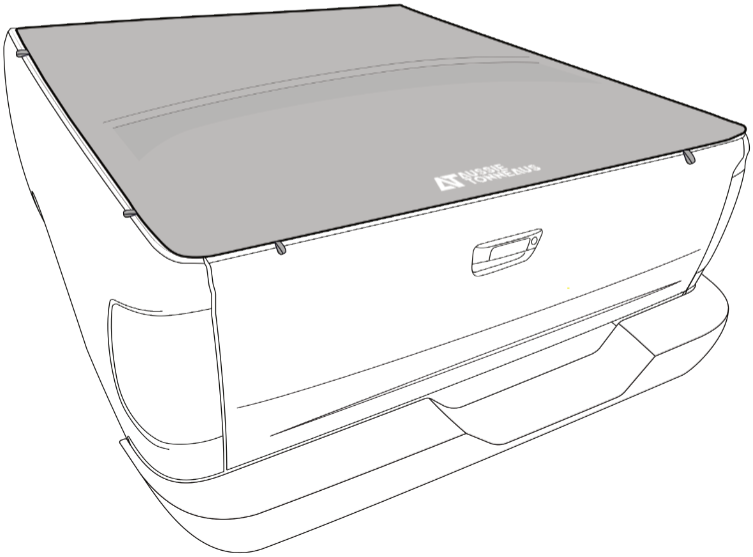

Tools Required

4mm Hex Key

13mm Spanner

In the Box

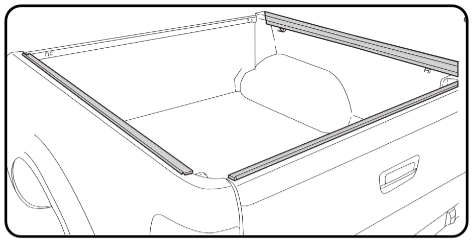

No Sport Bar Models

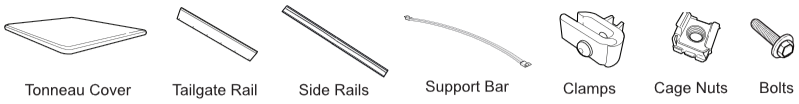

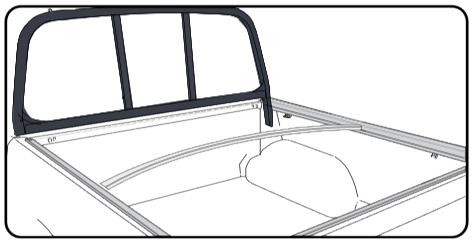

Headboard Models

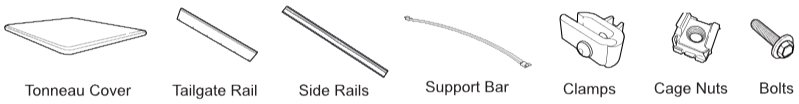

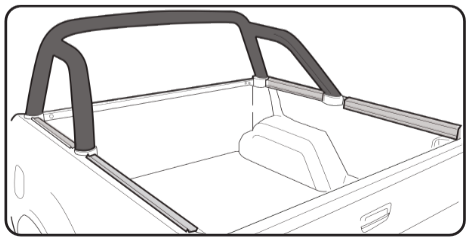

Sport Bar Models

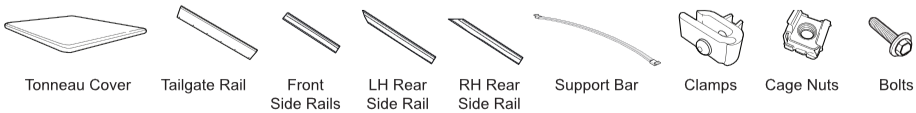

1. Attach the Side Aluminium Rails

***SEE APPENDIX FOR CARS: VW Amarok & Ram 1500 & Mitsubishi MQ/MR**

Clamp Assembly

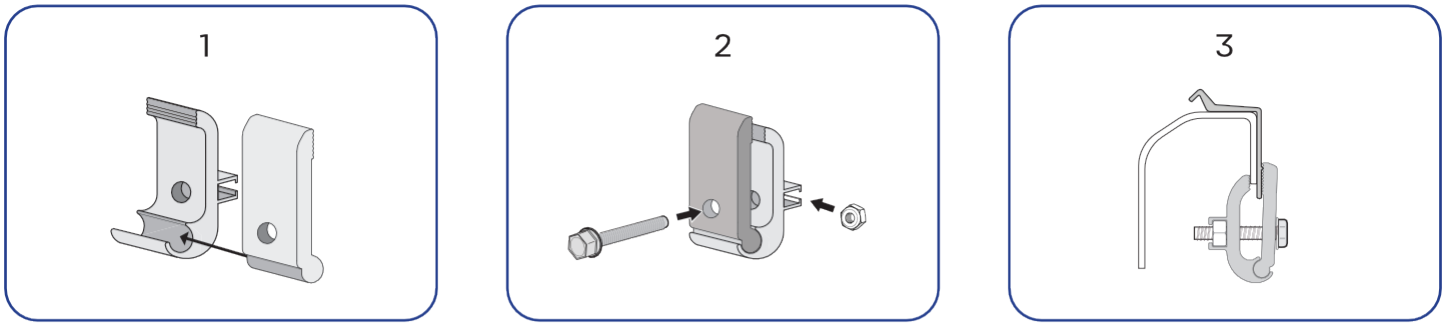

No Sport Bar Models

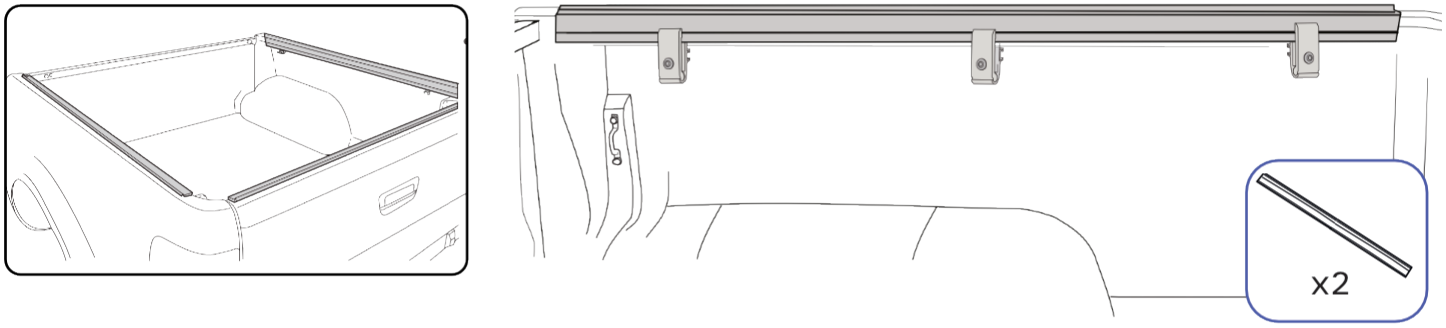

Headboard Models

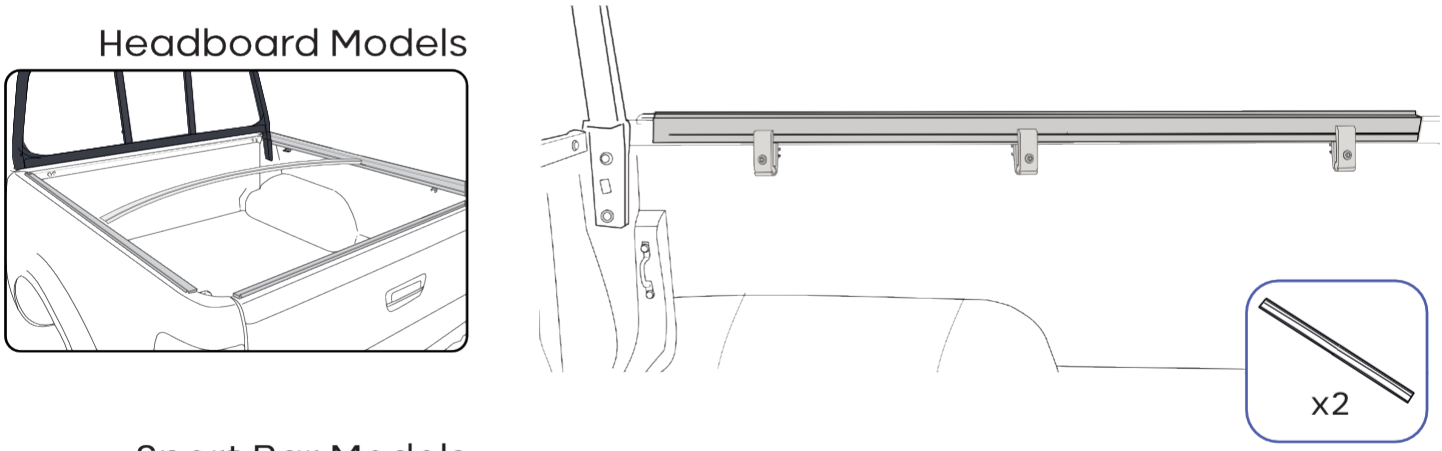

Sport Bar Models

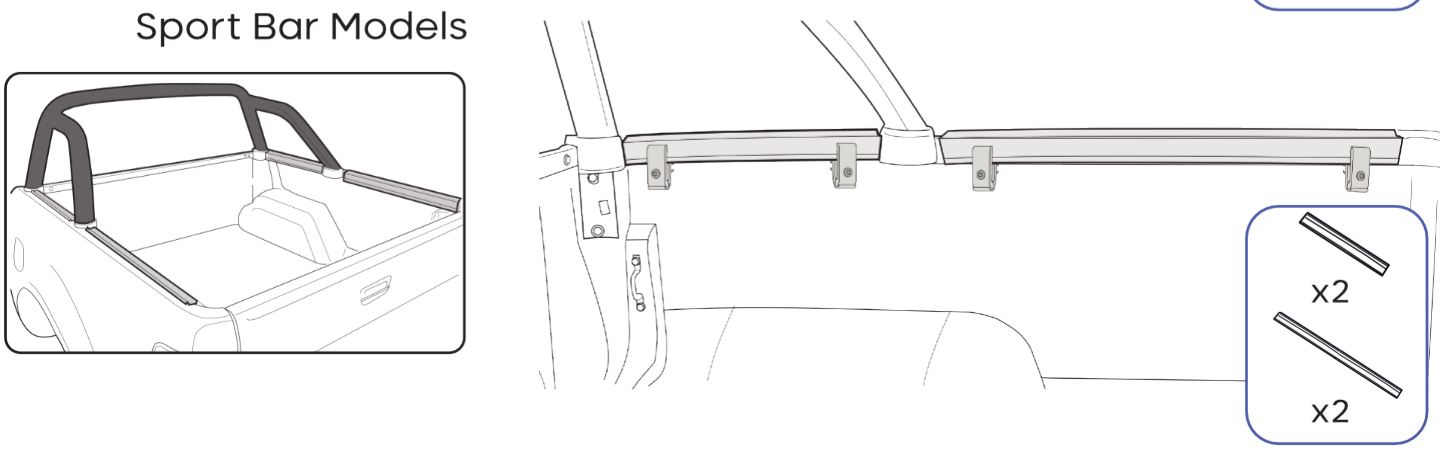

2. Attach Support Bar

2.1 Fit the Curved Oval tube to top of the the aluminium rails, in the centre of the Tub.

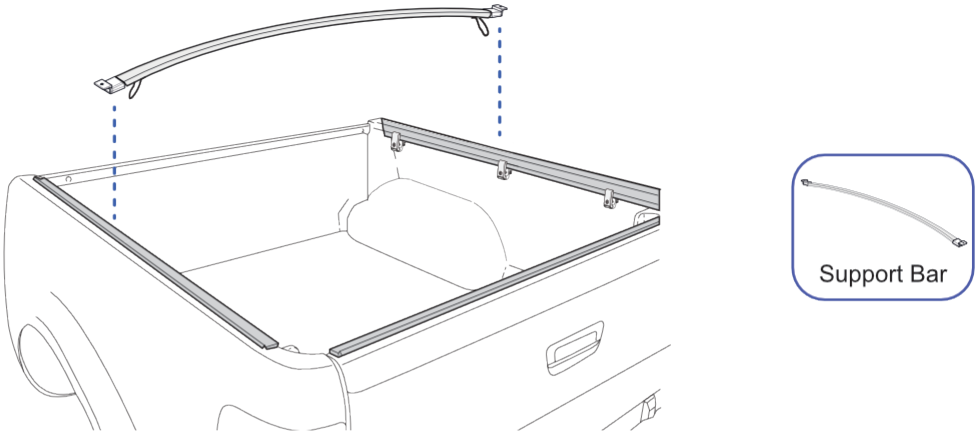

2.2 Wrap bunji cord around the centre clamp. This is to prevent support bar coming off.

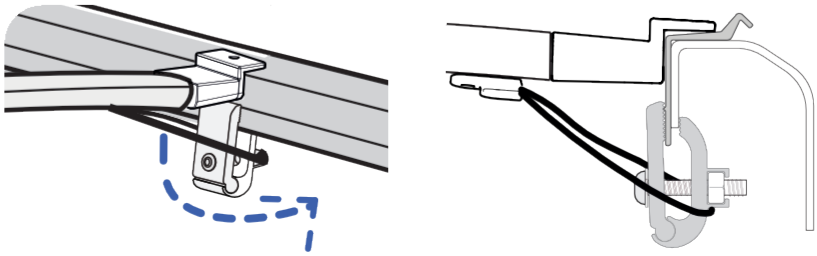

3. Prepare TailGate Rail

***SEE APPENDIX FOR CARS: Ram 1500**

3.1 Remove TailGate liner (if fitted), by unscrewing factory screws. Then peel off the plastic retainer (if fitted).

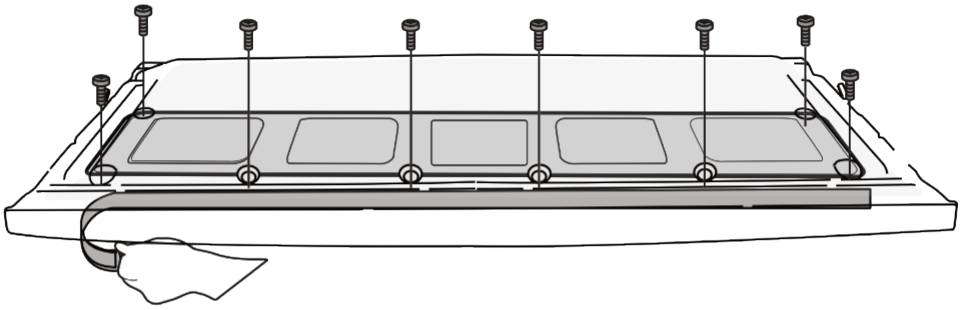

3.2 Remove the inspection panel by unscrewing any remaining screws

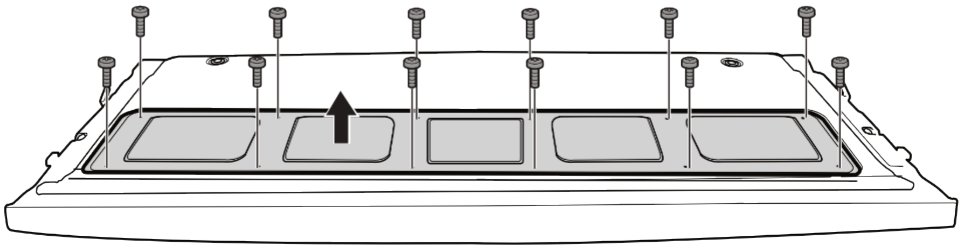

3.3 Remove the plastic inserts from the top of inspection panel.

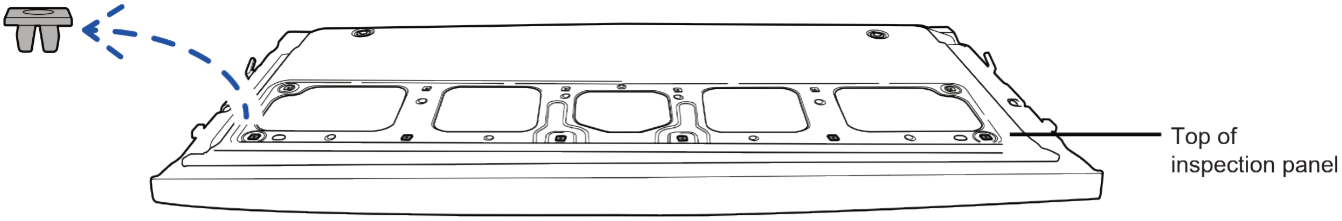

3.4 Replace these plastic inserts with the supplied Cage Nuts.
(Use space exposed by the inspection panel to feed hand through)

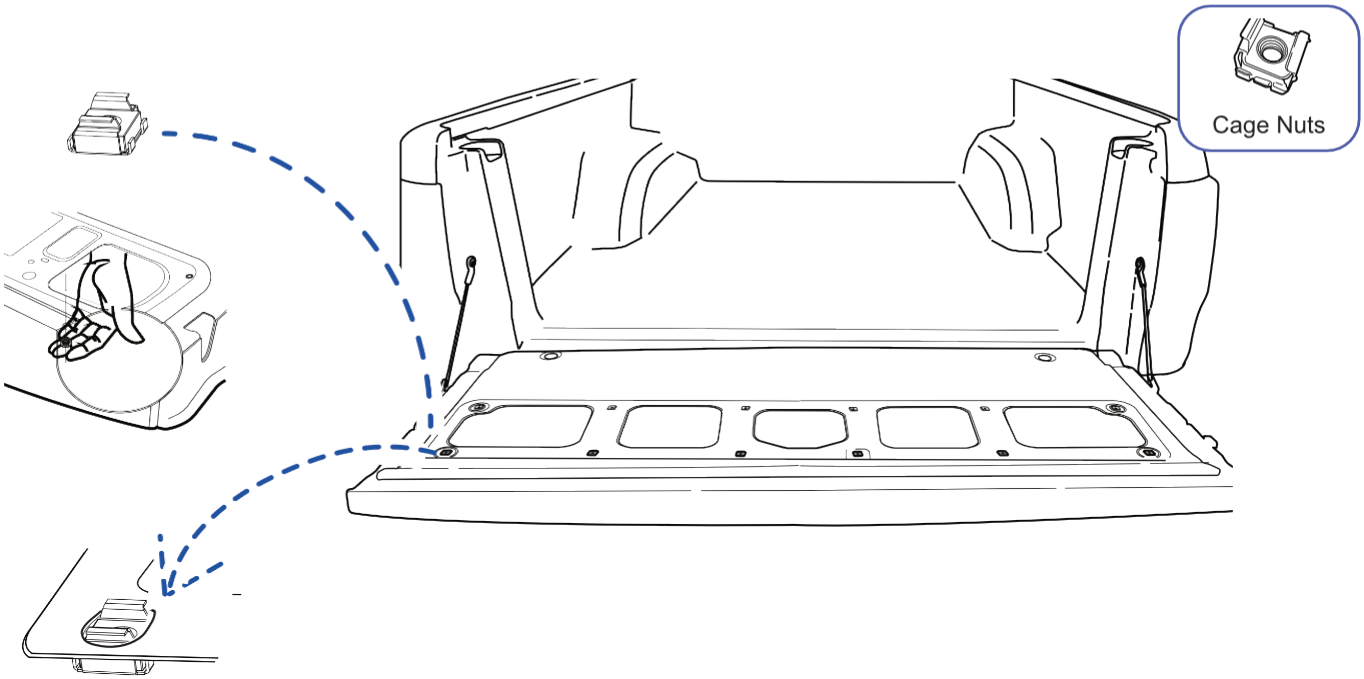

4. Attaching Tailgate Rail

Cars with tailgate liners (next page)

***SEE APPENDIX FOR CARS: Ram 1500**

4.1 Place the Tailgate Rail as shown so it is flush with the top surface.
4.2 Using only the bottom row of screws, Re-install the inspection panel.
4.3 Install the tailgate Rail by screwing into the cage nuts installed in the previous step.

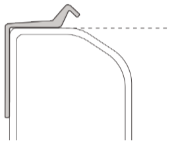

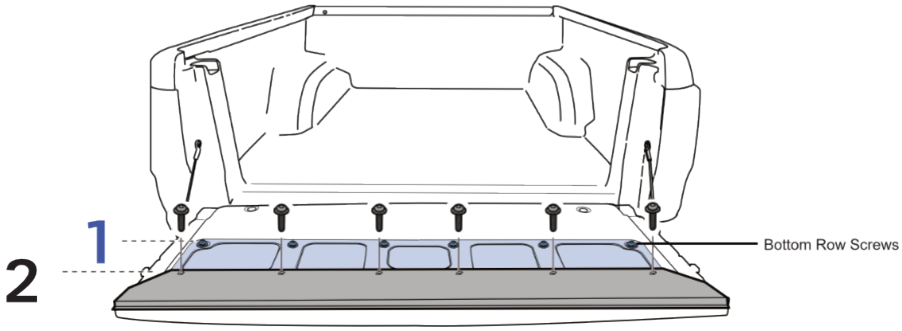

Order of installation

AUSSIE TONNEAUS

(Tailgate liner only)

1. Using only the bottom row of screws, Re-install the inspection panel.
2. Install the Tailgate Rail by screwing into the cage nuts installed in the previous step.
3. Re-install the factory tailgate liner with any factory hardware necessary.

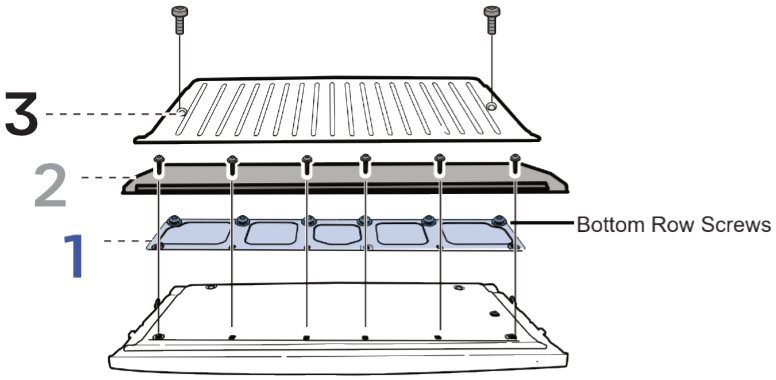

Order of installation

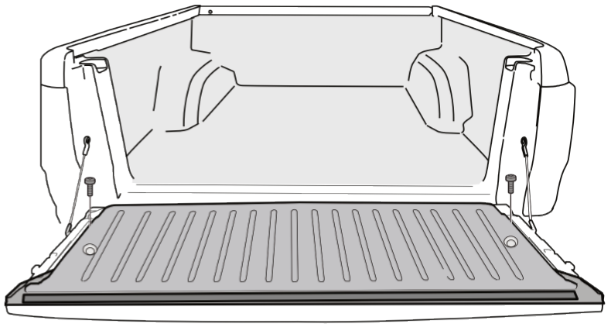

Finish appearance

5. Fitting the cover

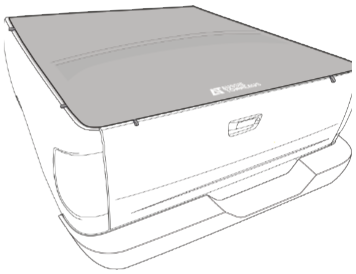

5.1. Attach the front of the cover to the front lip of the car.

5.2. Engage the back of the cover first, followed by the sides using the pull tabs (3).

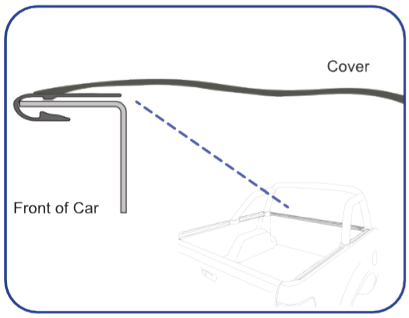

1

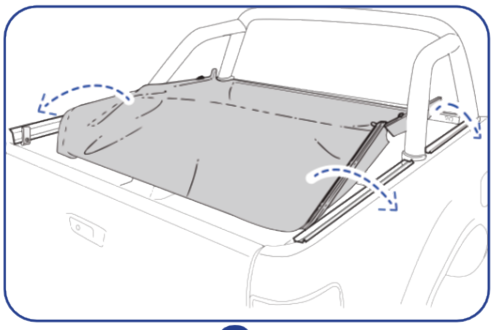

2

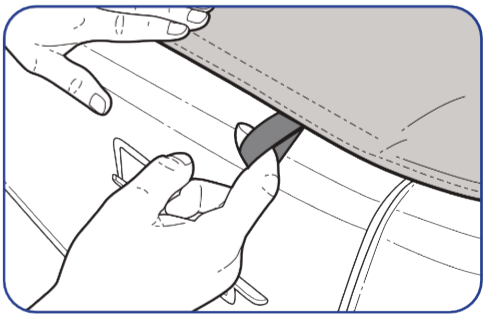

3

Appendix (Specified Cars)

Ram 1500

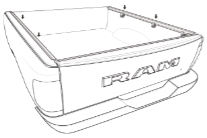

Tools Required

10mm Spanner

1. Attach the side Aluminium Rails

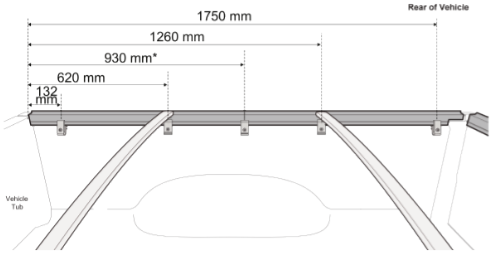

3. Prepare TailGate Rail

3.1 Remove Inspection panel.

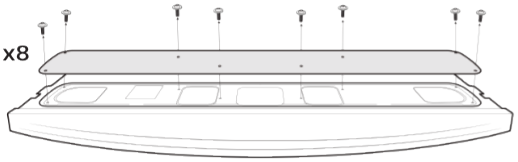

3.2 Remove the 6 plastic inserts from the top of inspection panel.

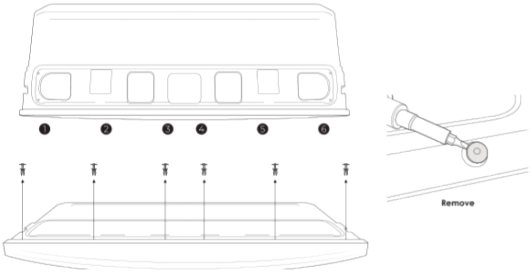

4. Attaching the Tailgate Rail

4.1 Remove the inspection panel by unscrewing the bolts.

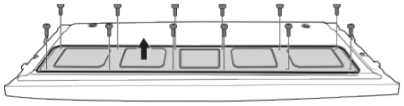

4.2 Install the Tailgate Rail by screwing the bolts into the nuts provided. (Nuts can be fed through tailgate shown in the image below.

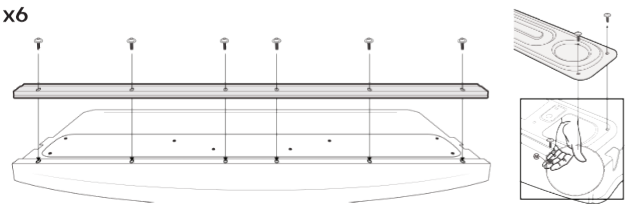

4.2 Re-install the inspection panel

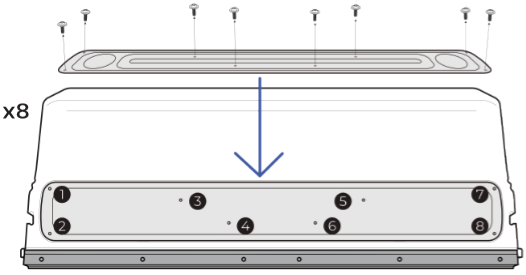

Mitsubishi MQ MR

(WITH SPORTBARS)

1. Attach the Front Rails

1.1 DO NOT take red tape off until sport bar bolts have be removed.
Remove and set aside the 4 bolts holding the front sports bar

Tools Required

13mm Spanner

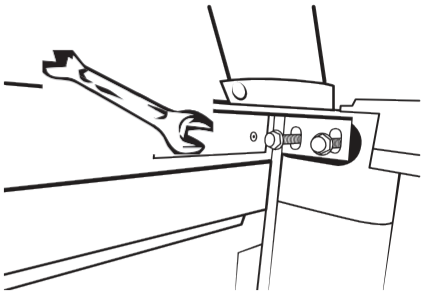

1.2 Place the Front Rail onto the top of the tub so the sports bar bolt holes align ensuring rail is flush with inside of tub.

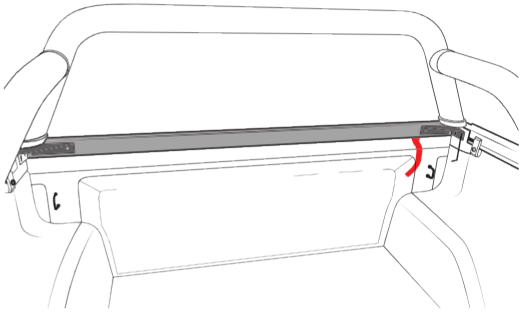

1.3 Carefully peel off the red double sided tape, and hold down firmly.

Mitsubishi MQ MR

(NO SPORTBARS)

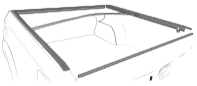

1. Attach the Front Rails

1.10 On the Front Rail, measure 6 points vertically n-line with the 6 rivets already in place, 25mm from bottom of aluminium and drill each point using a 4mm drill bit.

1.11 Place the Front Rail on front top edge of the tub and now drill through each of the 6 drilled holes into the tub. Using the provided rivets, rivet the aluminium rail in place.

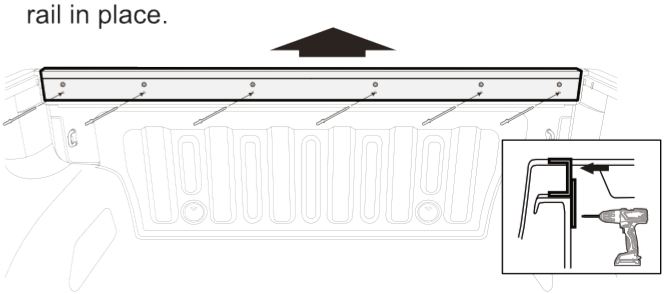

1.2 Attach side Rails

Refer back to page 2 and proceed with the instruction booklet. No sport bar = 3 clamps evenly spaced.

AUSSIE TONNEAUS

Appendix (Specified Cars)

VW Amarok Dual Cab

Tools Required

3mm Hex Key

1. Attach the Front rail Rails

1.1 Place front Rail onto the front edge of the tub & tighten side clamps (4).

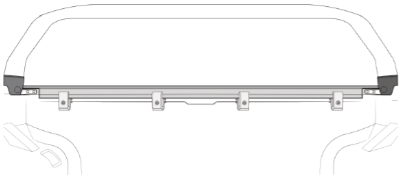

1.1 Attach side Rails

Repeat step 1 for the sides of the vehicle.
No sport bar = 3 clamps (evenly spaced).
Sport Bars = 2 clamps per rail

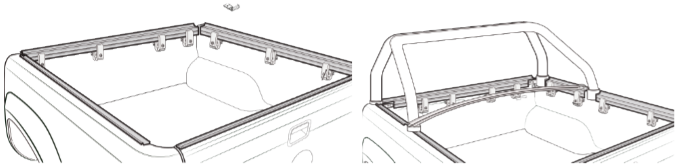

AUSSIE TONNEAUS